CD AUTO CHANGER

KDC-CPS82/CX82

SERVICE MANUAL

KENWOOD

© 1998-11 PRINTED IN JAPAN
B51-7401-00(S) 3276

KDC-CPS82 (E, M type)

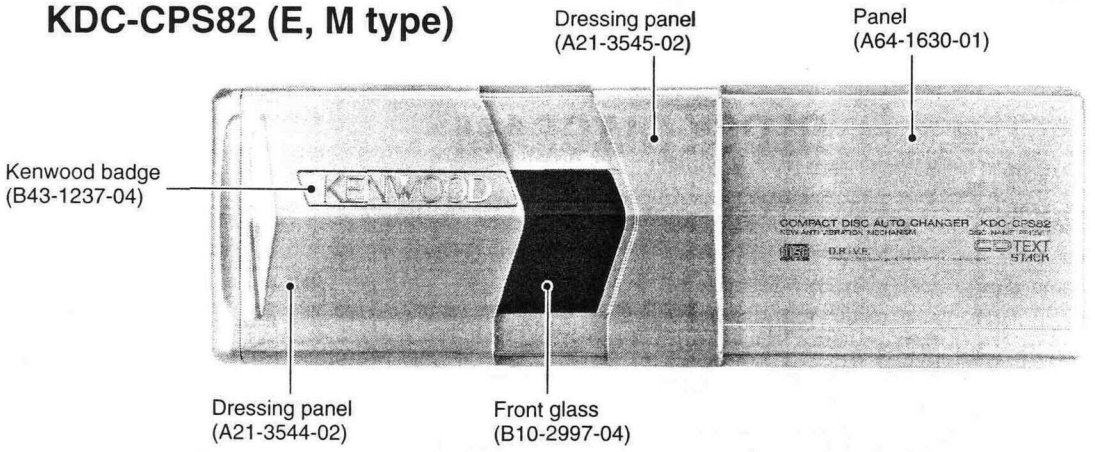

KDC-CX82 (K type)

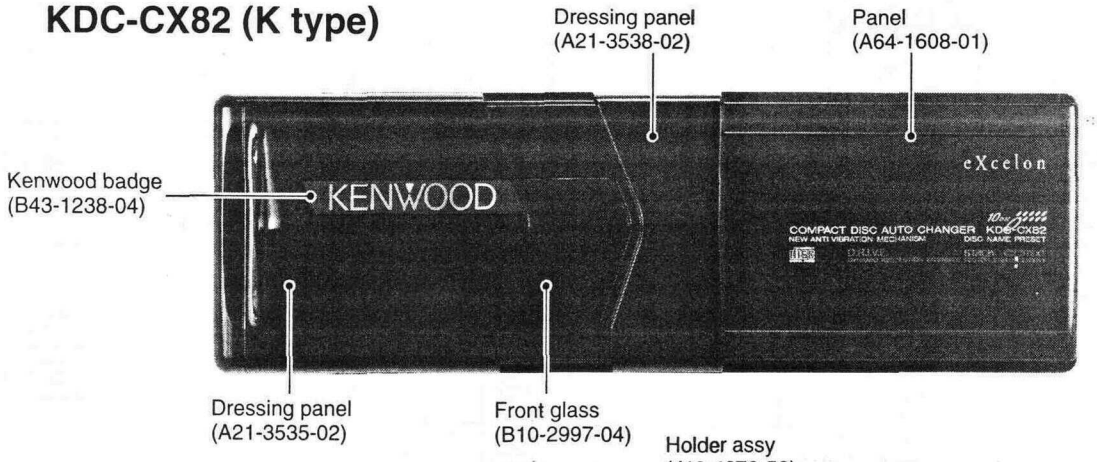

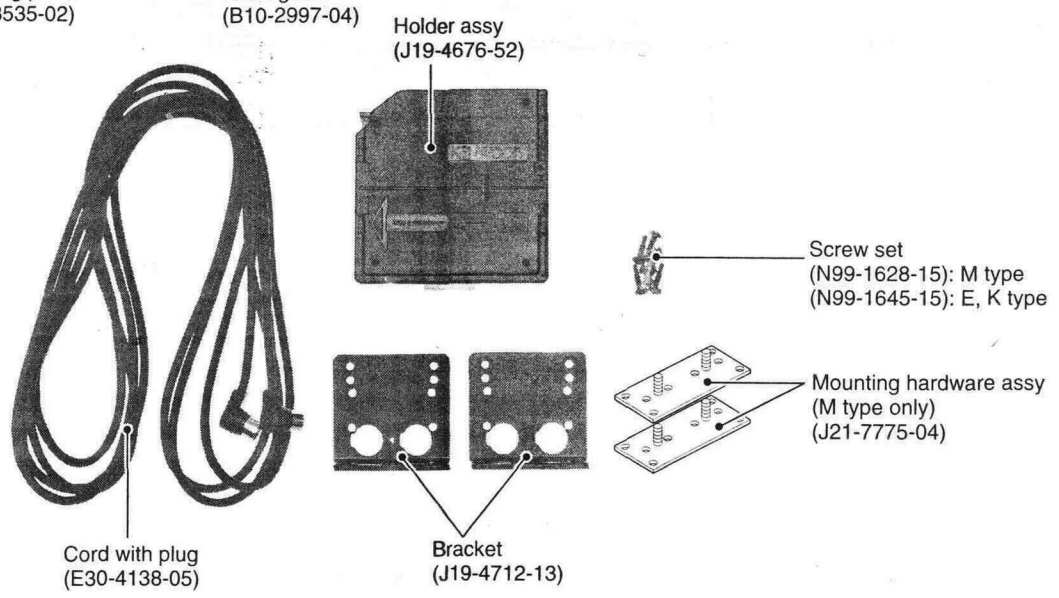

- When transporting these models, always attach CAUTION CARD and STEPPED SCREW (for transportation).
  CAUTION CARD : B58-1275-04
  STEPPED SCREW : N09-4186-25
- The MECHANISM OPERATION DESCRIPTION is the same as model KDC-C810.
  Please refer to the service manual of model KDC-C810 (B51-7103-00).

KDC-CPS82/CX82

CONTENTS

BLOCK DIAGRAM 2
COMPONENTS DESCRIPTION 3
MICROCOMPUTER'S DESCRIPTION 4
PC BOARD 9
SCHEMATIC DIAGRAM 13
EXPLODED VIEW (MECHANISM) 19
EXPLODED VIEW (UNIT) 20
PARTS LIST 21
SPECIFICATIONS ..... BACK COVER

BLOCK DIAGRAM

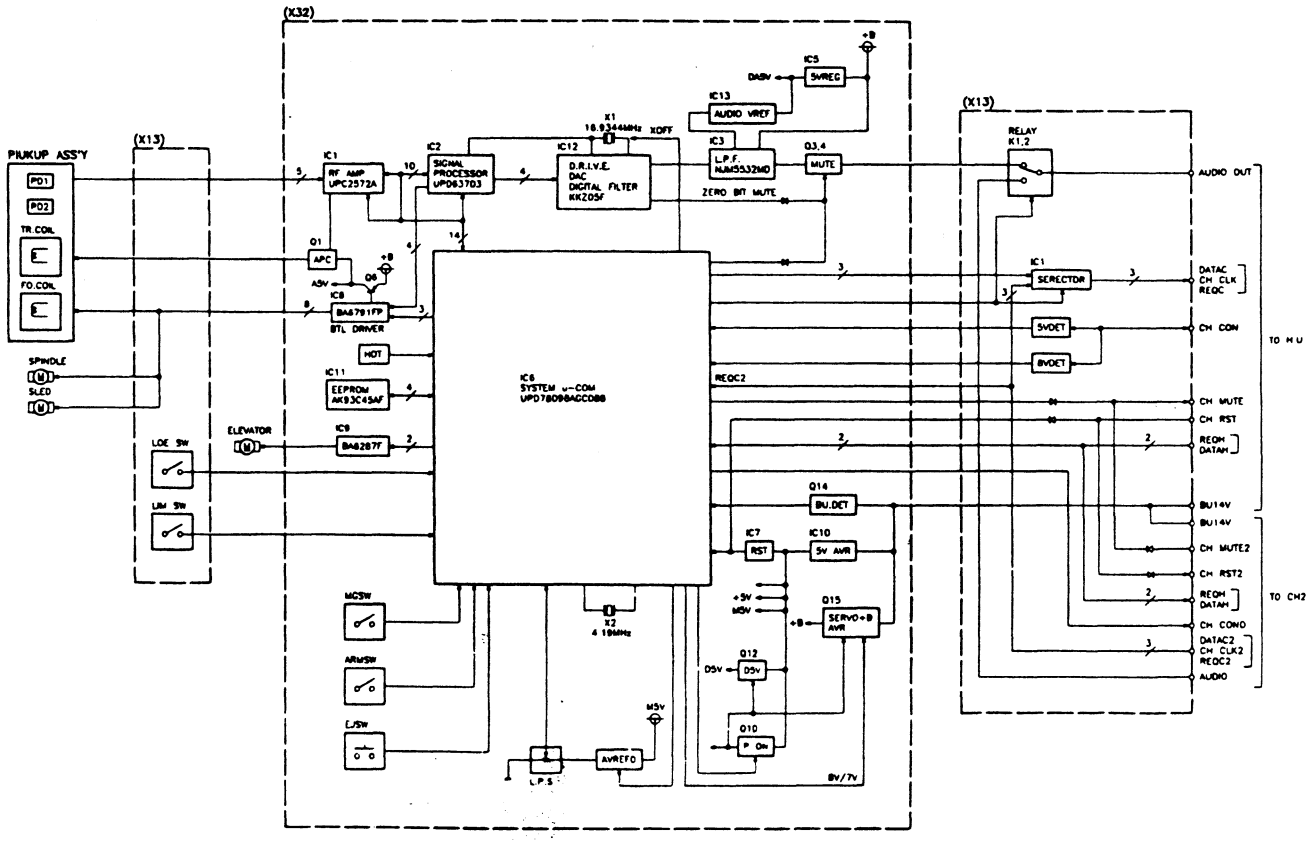

COMPONENTS DESCRIPTION

● CD PLAYER UNIT (X32-4410-01)

Component	Component Name	Application/Function	Operation/Condition/Compatibility
IC1	NJM5532MD	D/A converter output active filter	Differential amplifier
IC2	NJM4565MD	D/A 5V 1/2 Vcc regulator	Reference power supply for the audio filters
IC3	TA78L05F	3-pin regulator	Supplies 5V to the DSP and 5V to the active filter
IC4	TC74HC4072AF	Chip select control for IC11	Generates the communication permission signal from IC11 to IC7
IC5	LC3564BT-70	Text data memory	Data from the text decoder is stored in the memory via the µ-com
IC6	KKZ05F	Drive IC	Drive system, OSC,DAC
IC7	UPD784214GC028	System µ-com	
IC8	LC89170M	Text decoder	Decode sub-code data
IC9	UPD63702A	Digital servo data processor	Digital servo data processor, 8fs over-sampling filter, digital loop filter
IC10	AK93C45AF	Memory IC	Storage of the data on the initial position of the mechanism deck up-down operation
IC11	BA6219BFP-Y	Motor drive	Drives the mechanism deck up-down motor
IC12	BA6791FP	Motor drive	Drives the Focusing/Tracking actuators, sled motor and spindle motor
IC13	UPC2572A	RF amp & error amp	RF amplifier, Focusing/Tracking error amplifier, APC circuit, reference amplifier, mirror circuit, defect circuit, RF OK circuit, EFM comparator and vibration detector circuit
Q1 , 2	2SD2114K	Audio muting	Muting is turned ON when IC7 A.MUTE = "L"
Q3 , 4	DTA124EK	0 bit muting	Lch muting is turned ON when IC6 LZ = "H". Rch muting is turned ON when IC6 RZ = "H"
Q5	DTA124EK	Audio muting	Muting is turned ON when IC7 A.MUTE = "L"
Q6	DTA143EK	H/U communication control	Inverts the CH-CON logic
Q7	DAT114EK	LPS power SW	Goes ON when LPSCO of IC7 of goes "L" at P-ON or during up-down operation
Q8	DTC124EK	Clock ON/OFF	Clock is turned OFF when the IC7 XOFF terminal outputs "H"
Q9	DTC124EK	Audio muting	The system µ-com is reset when CH-RST is "H"
Q10	DTC124EK	H/U communication control	Inverts the CH-CON logic
Q11	DTA143EK	8V AVR SW	Tuner ON/OFF by P-ON
Q12	DTC124EK		
Q13	DTC124EK	AVR 8V/7V SW	7V when "H" (normal play mode). 8V when "L"(mechanism loading-ejection operation, ELV)
Q14	DTC124EK	AVR 9V/8V control	
Q15	2SC2412K	8V AVR drive	
Q16	2SA1362(Y)	P-ON SW	
Q17	2SC2412K	µ-com 5V drive	P-ANT is output when the base of Q17 goes "H"
Q20	2SC2412K	Kick pulse when scratch detected	A lens correction kick pulse is generated when a scratch is detected
Q21	2SB1188	5V optics power	Supplies the power from AVR 8V to the A.VDD of the Pick up, IC1 and IC2
Q22	2SA1362(Y)	Laser control	Controls the laser current according to the voltage output from the IC1 LD terminal
Q23 , 24	DTC124EK	0 bit muting	Lch muting is turned ON when IC6 LZ = "H". Rch muting is turned ON when IC6 RZ = "H"

● SUB CIRCUIT UNIT (X13-9200-01)

Component	Component Name	Application/Function	Operation/Condition/Compatibility
IC1	UPD7805GCB38T	µ-com	Interface µ-com
IC2	PST9137NR	Reset IC	
Q1	DTC124EK	Relay drive	Switches the audio signal between CH1 and CH2
Q3	DTB123YK		
Q2	DTC124EK	Relay drive	Switches the audio signal between CH1 and AUX
Q4	DTB123YK		
Q5 , 6	2SC2412K	CH-CON SW	Control switching for CH1 and CH2
Q7	DTC124EK	Monentary power down SW	OFF when monentary power down is detected
Q8	DTC124EK	Reset SW	ON when reset signal is input from H/U

MICROCOMPUTER'S DESCRIPTION

Interface μ-com : UPD7805GCB38T (X13-9200-01 : IC1)

● Terminal description

Pin No.	Pin Name	I/O	Function	Description	Processing Operation
1 - 3	P15/ANI5 - P17/ANI7	O		(Not used)	
4	AVss	-		A/D converter reference GND terminal	
5	P130/ANO0	O	RST OUT	Reset output	H : Changer reset
6	P131/ANO1	O	REQH1	Communication request to CH1	L : Communication request
7	AVref1	I	AVref1	A/D converter reference power terminal	
8	P70/SI2/RXD	I	DATAC1	Data input from CH1	
9	P71/SO2/TXD	O	DATAH1	Data output to CH1	
10	P72/SCK2/ASCK	I/O	HCLK1	Clock output to CH1	
11	P20/SI1	I	DATAH0	Data input from CH1	
12	P21/SO1	O	DATAC0	Data output from H/U	
13	P22/SCK1	I/O	HCLK0	Clock input from H/U	
14	P23/STB	O	REQC0	Communication request to H/U	L : Communication request
15	P24/BUSY	O	REQH2	Communication request to CH2	L : Communication request
16	P25/SI0/SB0/SDA0	I	DATAC2	Data input from CH2	
17	P26/SO0/SB1/SDA1	O	DATAH2	Data output to CH2	
18	P27/SCK0/SCL	I/O	HCLK2	Clock output to CH2	
19	P40/AD0	O	CHCONO1	Changer1 control output	H : CH1 control request
20	P41/AD1	O	CHCONO2	Changer2 control output	H : CH2 control request
21	P42/AD2	O	RELAY1	Relay 1 control terminal	H : AUX L : CH1
22	P43/AD3	O	RELAY2	Relay 1 control terminal	H : CH1 L : CH2
23	P44/AD4	O	MSTOP	(Not used)	H : CH monentary power down
24 - 26	P45/AD5 - P47/AD7	O		(Not used)	
27 - 32	P50/A8 - P55/A13	O		(Not used)	
33	Vss	-		GND	
34 , 35	P56/A14 , P57/A15	O		(Not used)	
36 - 43	P60 - P67	O		(Not used)	
44 - 50	P30 - 37	O		(Not used)	
52 - 59	P120/RTP0 - P127/RTP7	O		(Not used)	
60	RESET	I		Reset input	L : Reset
61	P00/INTP0/TI00	I	REQC2	Communication request from CH2	L : Communication request
62	P01/INTP1/TI01	I	BUDET	Momentary power down detection	H : Momentary power down detection
63	P02/INTP2	I	AUX SW	AUX input switch	H : AUX input
64	P03/INTP3	I	REQH0	Communication request from H/U	L : Communication request
65	P04/INTP4	I	REQC1	Communication request from CH1	L : Communication request
66	P05/INTP5	I	CHCON1	CH1 control input from H/U	L : Changer control request
67	P06/INTP6	I	COMMSW	5-line communication previous/new switch	H : New L : Previous
68	Vdd	-	VDD	Positive power voltage connection terminal	
69	X2	-	X2	Oscillator connection terminal 2	
70	X1	I	X1	Oscillator connection terminal 1	
71	IC(Vpp)	-		Inner connection terminal	
72	XT2	-		(Not used)	
73	XT1/P07	I	CHCON2	CH2 control input from H/U	L : CH2 control request
74	AVdd	-	AVDD	A/D converter analog power terminal	
75	AVref0	I	AVREF0	(Not used)	
76 - 80	P10/ANI0 - P14/ANI4	O		(Not used)	

MICROCOMPUTER'S DESCRIPTION

System μ-com : UPD784214GC028 (X32-4410-01 : IC7)

● Terminal description

Pin No.	Pin Name	I/O	Function	Description	Processing Operation
1	P120/RTP0	O	LDON	Pick Up laser ON	H : Laser ON
2	P121/RTP1	O	TBCO	Tracking filter coefficient switching signal output	H : Gain up mode
3	P122/RTP2	I	TBCI	Tracking filter coefficient switching signal input	H : Gain up mode
4	P123/RTP3	I	RFOK	Focus ON status signal input	H : Focus ON
5	P124/RTP4	O	XOFF	Servo IC oscillation stop control	H : Stop oscillation
6	P125/RTP5	O	RST	Servo IC reset terminal	L : Reset
7	P126/RTP6	O	SA0	Servo IC communication address setting	
8	P127/RTP7	O	SSTB	Servo IC communication strobe	
9	VDD		VDD	Positive power voltage connection terminal	
10	X2		X2	Oscillator connection terminal 2	
11	X1	I	X1	Oscillator connection terminal 1	
12	VSS		VSS	Connected to GND potential	
13	XT2		XT2	Sub-clock connection terminal 2	Not used
14	XT1	I	XT1	Sub-clock connection terminal 1	Not used
15	RESET	I	RESET	Reset	
16	P00/INTP0	I	SBSY	Sub-code Q read timing detection terminal	
17	P01/INTP1	I	MGSW	Magazine switch	H : Magazine IN
18	P02/INTP2	I	EJSW	Eject switch	H : Switch ON
19	P03/INTP3	I	COMMSW	5-line communication previous/new switch	H : New communication
20	P04/INTP4	I	DQSY	Text data read permission signal input	
21	P05/INTP5	I	CHCON	Changer control input from H/U	
22	P06/INTP6	I	BUDET	B.U power detection terminal	
23	AVDD		AVDD	A/D converter analog power terminal	
24	AVREF0	I	AVREF0	A/D converter reference voltage input	
25	P10/ANI0	I	HOT	Hot temperature detection	
26	P11/ANI1	I	LPS	MD deck up/down position detection	
27	P12/ANI2	I	LOESW	Loading completion switch	L : Loading completed
28	P13/ANI3	I	LIMSW	Limit switch	L : Pickup at innermost position
29	P14/ANI4	I	TYPE0	For test mode	
30	P15/ANI5	I	TYPE1	For test mode	
31	P16/ANI6	I	SLG1	Sled loop gain setting	
32	P17/ANI7	I	SLG2	Sled loop gain setting	
33	AVSS		AVSS	A/D converter reference GND terminal	
34	P130/ANO0	O	LPSCO	A/D converter reference power control	
35	P131/ANO1	O	AMUTE	Audio mute	L : Mute ON
36	AVREF1		AVREF1	A/D converter reference power terminal	
37	P70/RxD2/SI2	I	SDI	Servo IC communication serial data input	
38	P71/TxD2/SO2	O	SDO	Servo IC communication serial data output	
39	P72/ASCK2/SCK2	O	SCK	Servo IC communication serial clock output	
40	P20/RxD1/SI1	I	DATAH	Data input from H/U	
41	P21/TxD1/SO1	O	DATAC	Data output from changer	
42	P22/ASCK1/SCK1	I/O	HCLK	Communication clock input from H/U	

MICROCOMPUTER'S DESCRIPTION

Pin No.	Pin Name	I/O	Function	Description	Processing Operation
43	P23/PCL	O	REQC	Communication request to H/U	
44	P24/BUZ	O	CHMUTE	Audio muting output to H/U	L : Mute ON
45	P25/SI0/SDA0	I	TXTDATA	Text data input	
46	P26/SO0	O		(Not used)	
47	P27/SCK0/SCL0	O	TXTCLK	Text clock output	
48 - 55	P80/A0 - P87/A7	O	A0 - A7	Address setting output to S-RAM	
56 - 63	P40/AD0 - P47/AD7	I/O	D0 - D7	Data input/output with S-RAM	
64 - 68	P50/A8 - P54/A12	O	A8 - 12	Address setting output to S-RAM	
69 - 71	P55/A13 - P57/A15	O	A13 - 15	S-RAM enable control terminal	
72	VSS		VSS	GND connection terminal	
73	P60/A16	O	A16	S-RAM enable control terminal	
74	P61/A17	O	A17	S-RAM enable control terminal	
75	P62/A18	O	RAMOK	RAM check result terminal for use in production process	
76	P63/A19	I	ELVADJ	MD deck elevation position adjustment mode	
77	P64/RD	O	RD	Read control output to S-RAM	
78	P65/WR	O	WR	Write control output to S-RAM	
79	P66/WAIT	I	WAIT	Wait insertion during access with S-RAM	
80	P67/ASTB	O	ASTB	S-RAM chip select output	
81	VDD		VDD	Positive power voltage connection terminal	
82	P100/TI5/TO5	I	RAMTEST	RAM check mode for use in production process	
83	P101/TI6/TO6	I	REQH	Communication request from H/U	
84	P102/TI7/TO7	O	SP/LO+	Spindle/Loading control terminal +	
85	P103/TI8/TO8	O	SP/LO-	Spindle/Loading control terminal -	
86	P30/TO0	O	ELV+	MD elevation control terminal +	
87	P31/TO1	O	ELV-	MD elevation control terminal -	
88	P32/TO2	I	EDI	EEPROM data input	
89	P33/TI1	O	EDO	EEPROM data output	
90	P34/TI2	O	ECLK	EEPROM clock output	
91	P35/TI00	O	ECS	EEPROM chip select output	
92	P36/TI01	O	8V/7V	Mechanism operation drive IC power voltage control	
93	P37	I	ADJSEL	Automatic servo adjustment ON/OFF terminal	L : Automatic servo adjustment ON
94	TEST/VPP	I	TEST/VPP	Flash ROM program mode	
95	P90	I	SRVSEL	Servo operation mode (without mechanism operation)	H : Servo mode
96	P91	I	SLNSA	Sled non-sensitive band ON/OFF terminal	L : Sled non-sensitive band ON
97	P92	I	TEST1	Destination type terminal	
98	P93	I	TEST2	Destination type terminal	
99	P94	O	PON	PON output	
100	P95	I	ARMSW	Arm switch	

● TEST MODE

1. How to enter

While holding the magazine EJECT switch, reset the unit and keep on holding the EJECT switch for more second to enter the E-88

(NOTE) In the E-88 mode, the initial position detection operation at the time of reset start is not performed.

2. Manual operation functions

The E-88 display appears when the H/U is set to the changer mode. In this condition, the changer mechanism can be operated manually using the Track search UP/DOWN and Disc search UP/DOWN keys.

Track search UP key :

Operates the Spindle/Loading motor in the direction for pulling the disc tray into the mechanism deck

Track search DOWN key :

Operates the Spindle/Loading motor in the direction for returning the disc tray into the magazine

Disc search UP key :

Operates the ELV motor in the direction for moving the mechanism deck upward

Disc search DOWN key :

Operates the ELV motor in the direction for moving the mechanism deck downward

● POSITION ADJUSTMENT

1. LPS initial position adjustment procedure

Connect the changer to the H/U. While holding the magazine [EJECT] key of the changer, press the [RESET] key of the H/U and, in about 1 second, release the magazine [EJECT] key. Press the [CD] key of the H/U to enter the E-88 mode. Move the mechanism deck to around the 1st stage by pressing the [DISC–] or [DISC+] key. Insert the adjustment tool into the tool hole on the changer mechanism. Then press the [DISC+] key to move the mechanism deck until the mechanism's slider hits the adjustment tool. When the motor locks (stops) press the [REPEAT] key of the H/U.

When the [REPEAT] key is pressed, the mechanism moves automatically to the 1st stage and the initial position adjustment completes. (The data is written in the EEPROM at this time)

3. Position adjustment funcion

This function writes the mechanism position adjustment values in the EEPROM in the E-88 mode

[Adjustment procedure]

- With the mechanism in the magazine ejection condition, move the mechanism manually up and down to set the mechanism to the reference position
- Pressing the REP key of the H/U starts the judgment of the mechanism position, and the distinction whether the changer is a 6-disc or 10-disc changer.
  If the mechanism position is extremely deviated from the reference position, the processing is aborted immediately
- The offset from the reference position is calculated and the 10 data and offset values are written in the EEPROM
- Data is read from the EEPROM to judge whether it has been written normally.
  When it is judged that the write operation has completed normally, the mechanism deck moves to the magazine ejection standby position.
  When it is judged that the write operation was abnormal, the mechanism performs no operation.

(NOTE) Mechanism reference position

10 disc mechanism : 6th stage

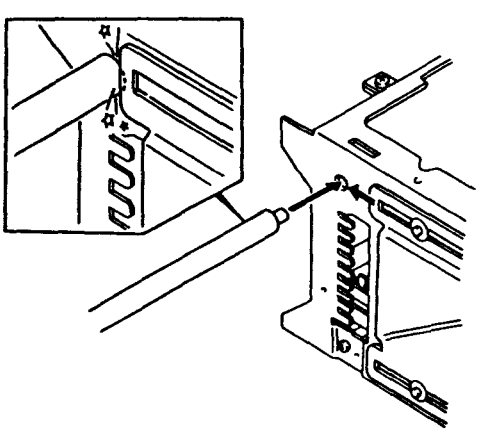

ADJUSTMENT TOOL : W05-0635-00

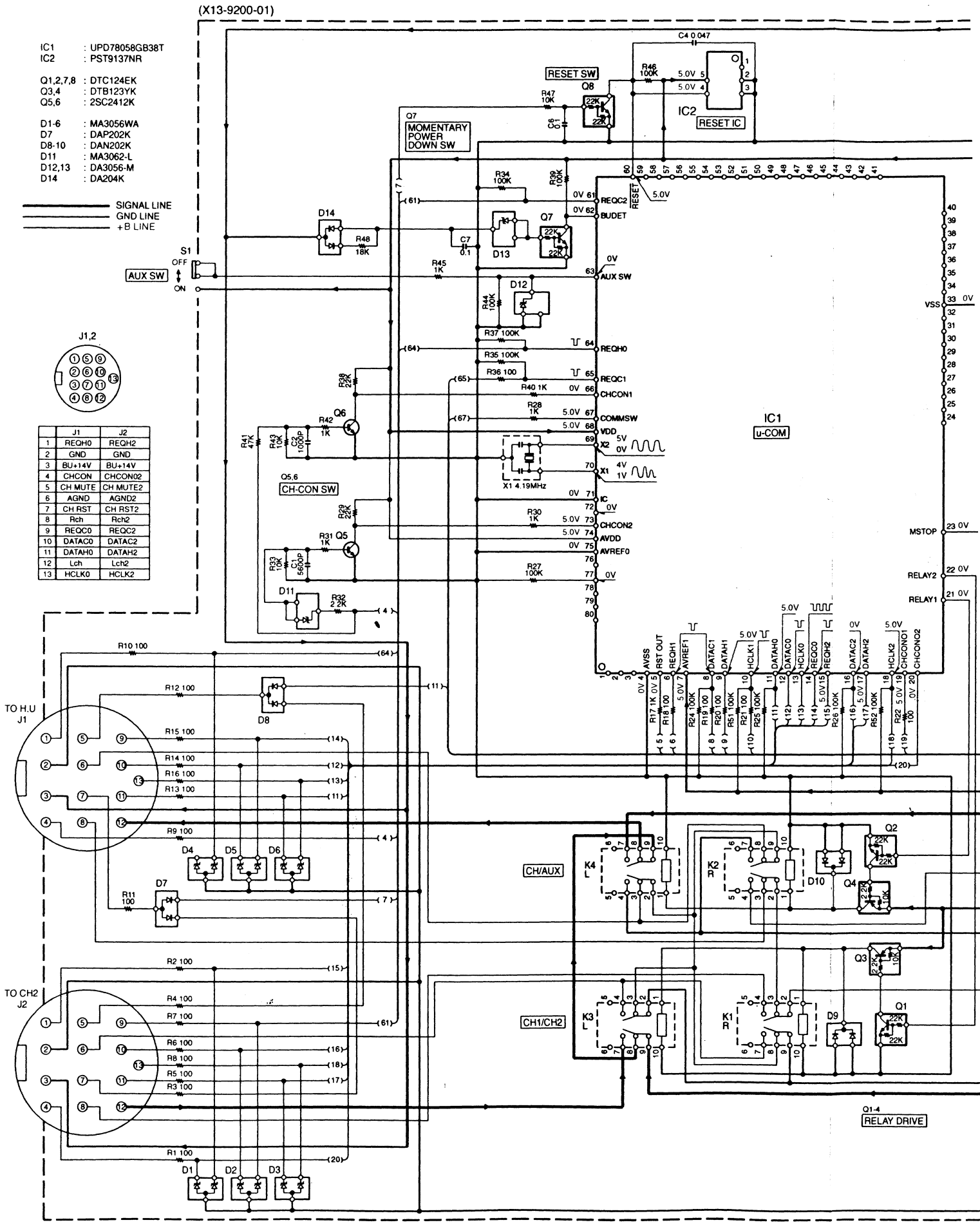

	J1	J2
1	REQH0	REQH2
2	GND	GND
3	BU+14V	BU+14V
4	CHCON	CHCON02
5	CH MUTE	CH MUTE2
6	AGND	AGND2
7	CH RST	CH RST2
8	Rch	Rch2
9	REQC0	REQC2
10	DATAC0	DATAC2
11	DATAH0	DATAH2
12	Lch	Lch2
13	HCLK0	HCLK2

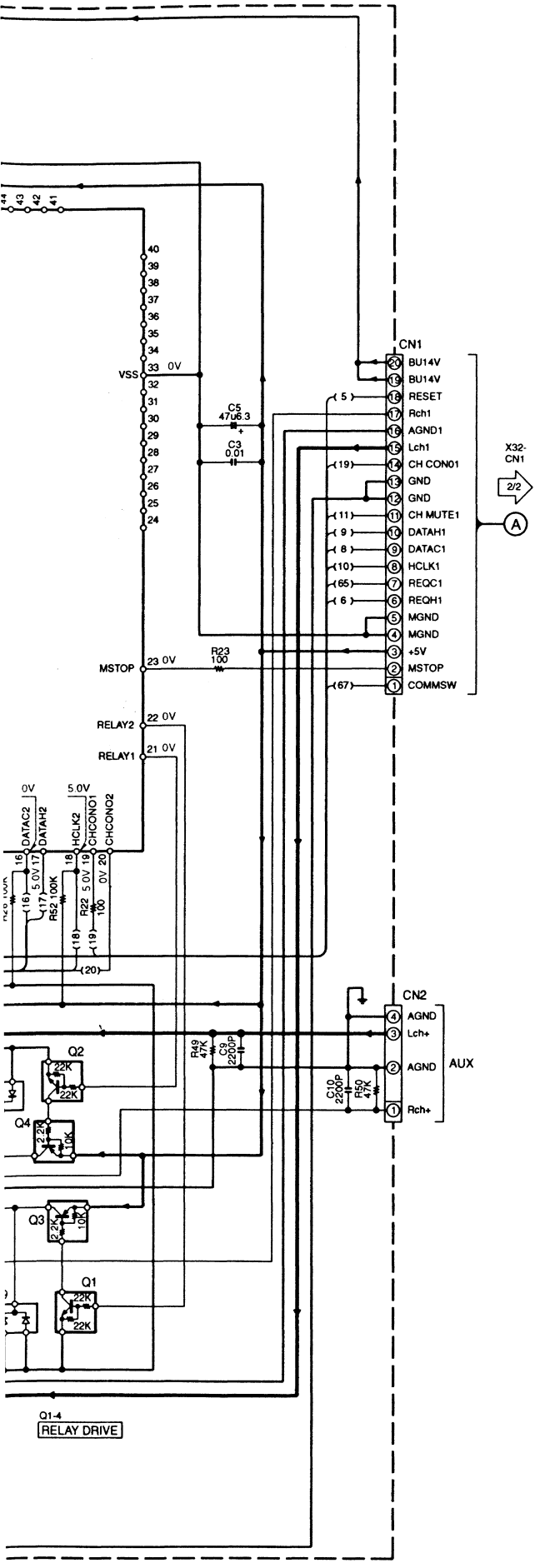

2SB1565

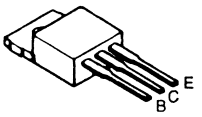

DTA114EK
DTA124EK
DTA143EK
DTB123YK
DTC124EK
2SA1362
2SC2412K
2SD2114K

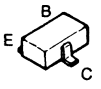

2SB1188

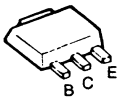

NJM4565MD
NJM5532MD

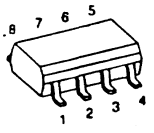

DAN202K

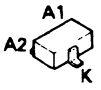

TA78L05F

DA204K

LC89170M

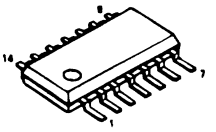

PST9137NR

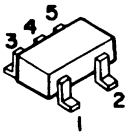

BR93LC46AF

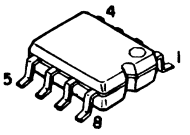

AK93C45AF

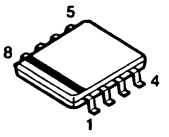

CAUTION: For continued safety, replace safety critical componen only with manufacturer's recommended parts (refer to parts list). ⚠ indicates safety critical components. To reduce the risk of electric shock, leakage-current or resistance measurements shall be carried out (exposed parts are acceptably insulated from the supply circuit) before the appliance is returned to the customer.

DC voltages are as measured with a high impedance voltmeter. Values may vary slightly due to variations between individual instruments or/and units.

KDC-CPS82/CX82

KENWOOD

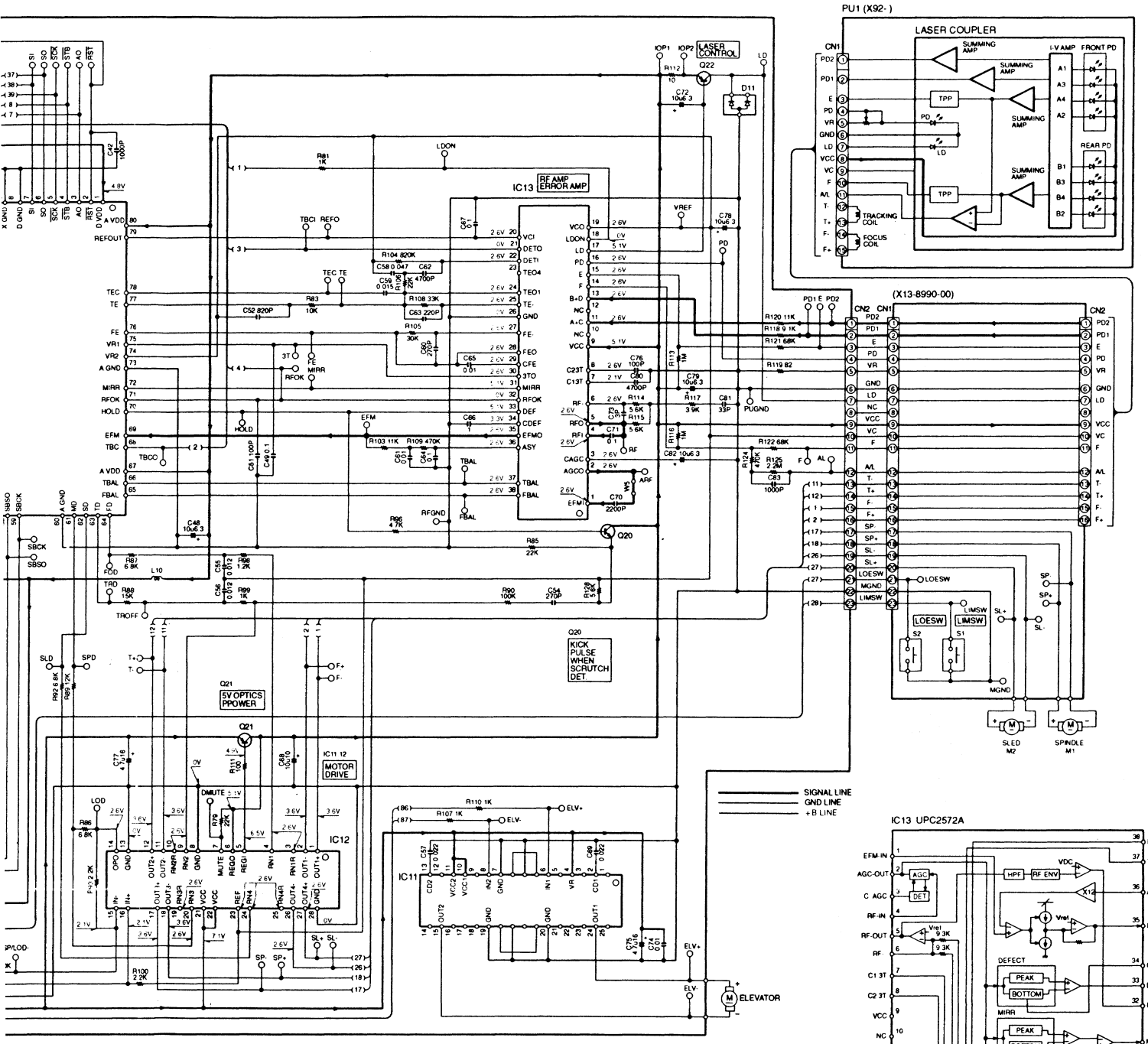

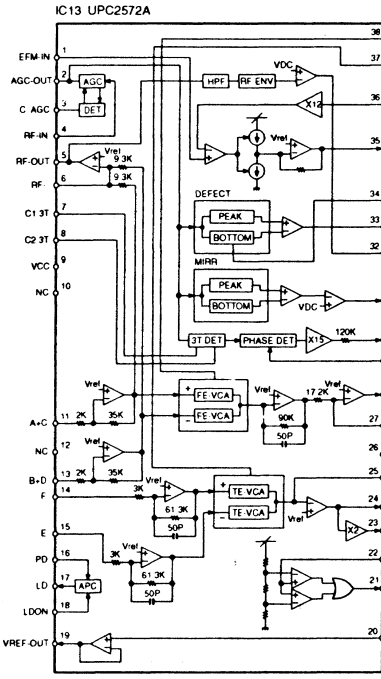

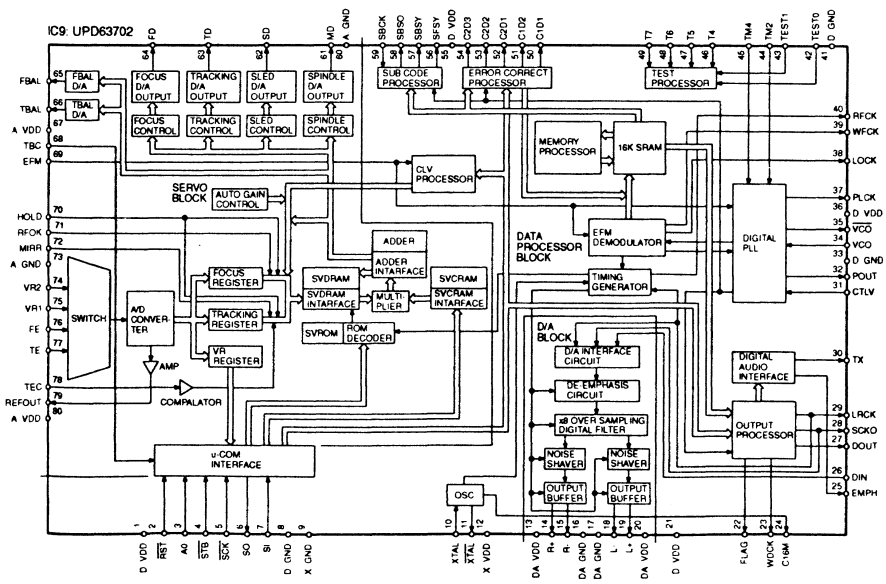

al com-
s (refer
nts. To
istance
accept-
ance is

eter.
istru-

KDC-CPS82/CX

KENWOOD

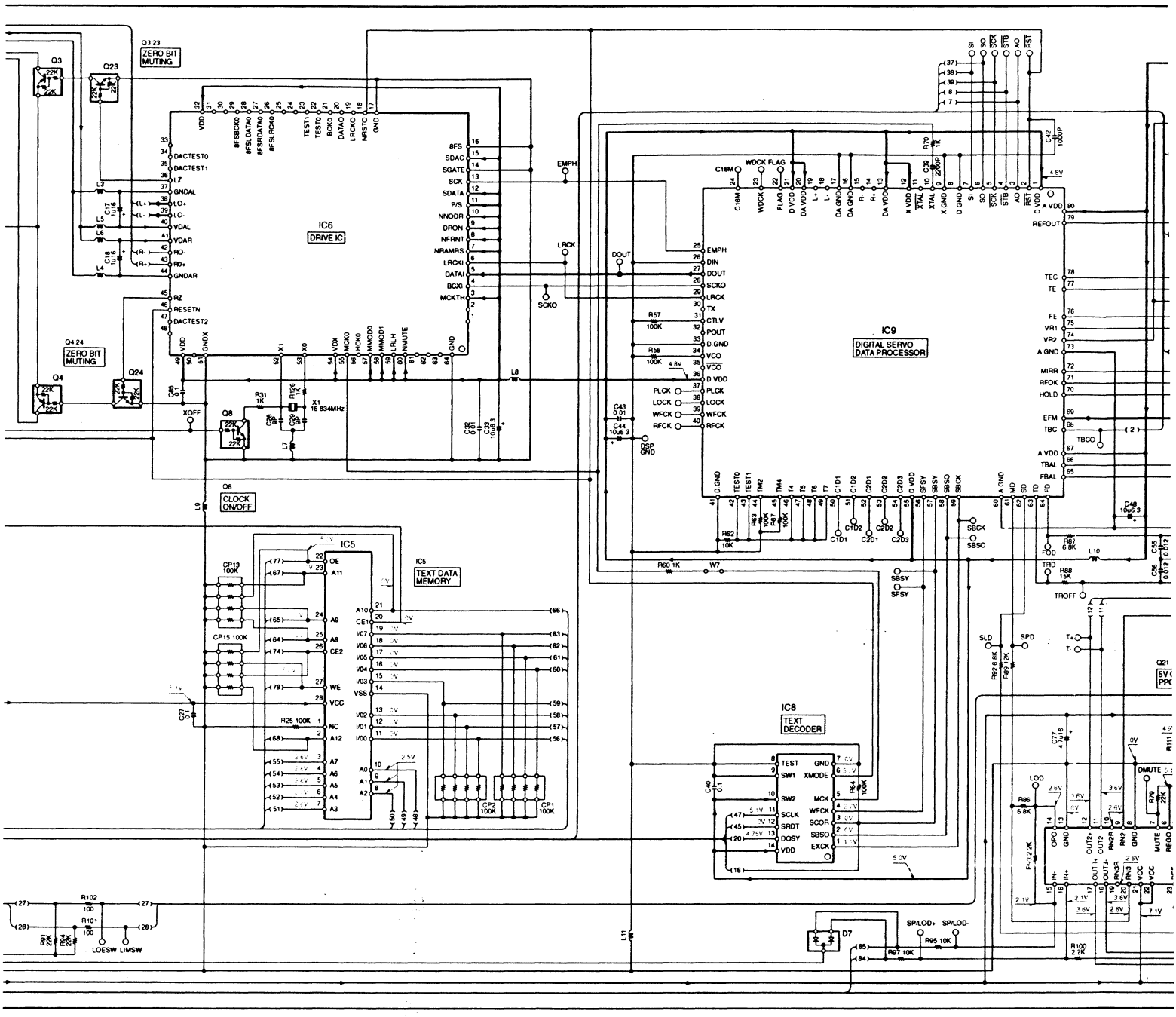

IC1	: NJM5532MD	Q1,2	: 2SD2114K
IC2	: NJM4565MD	Q3-5	: DTA124EK
IC3	: TA78L05F	Q6,11	: DTA143EK
IC4	: TC74HC4072AF	Q7	: DTA114EK
IC5	: LC3564BT-70	Q8-10,12-14,23,24	: DTC124EK
IC6	: KKZ05F	Q15,17,20	: 2SC2412K
IC7	: UPD784214GC028	Q16,22	: 2SA1362(Y)
IC8	: LC89170M	Q21	: 2SB1188
IC9	: UPD63702A	Q998,999	: 2SB1565(B,F)
IC10	: AK93C45AF or BR93LC46AF	D1,2,7	: DAN202K
IC11	: BA6219BFP-Y	D3,9,10	: 1SR154-400
IC12	: BA6791FP	D4	: MA3075-M
IC13	: UPC2572A	D5	: MA3091-L
		D6	: MA3100-M
		D8	: MA3062-M
		D11	: DAP202K

CAUTION: For continued safety, replace safety critical componen only with manufacturer's recommended parts (refer to parts list). ⚠ indicates safety critical components. To reduce the risk of electric shock, leakage-current or resistance measurements shall be carried out (exposed parts are acceptably insulated from the supply circuit) before the appliance is returned to the customer.

DC voltages are as measured with a high impedance voltmeter. Values may vary slightly due to variations between individual instruments or/and units.

IC9: UPD63702

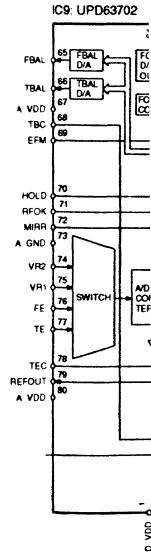

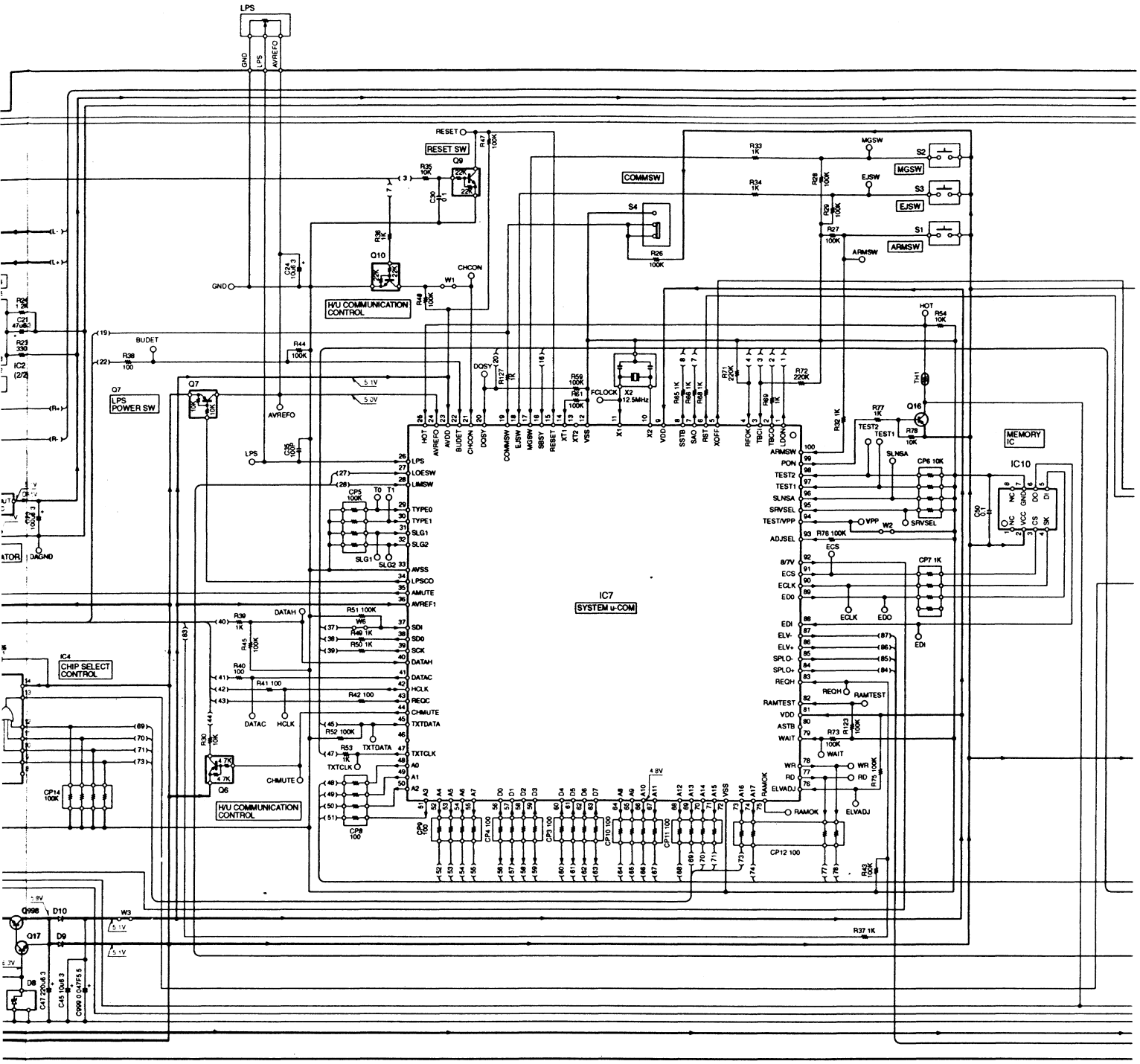

E
F
G
H
I
LPS
GND
LPS
AVREFO
RESET
RESET SW
Q9
COMMSW
S4
MGSW
EJSW
ARMSW
S2
S3
S1
H/U COMMUNICATION CONTROL
Q10
CHCON
W1
BUDET
Q7
LPS POWER SW
AVREFO
DOSY
FCLOCK
X2
12.5MHz
HOT
Q16
MEMORY IC
IC10
IC7
SYSTEM u-COM
IC4
CHIP SELECT CONTROL
DATAH
DATAC
HCLK
CHMUTE
TXTDATA
TXTCLK
Q6
H/U COMMUNICATION CONTROL
CP8 100
CP12 100
Q998
Q17
D10
D9
D8
W3

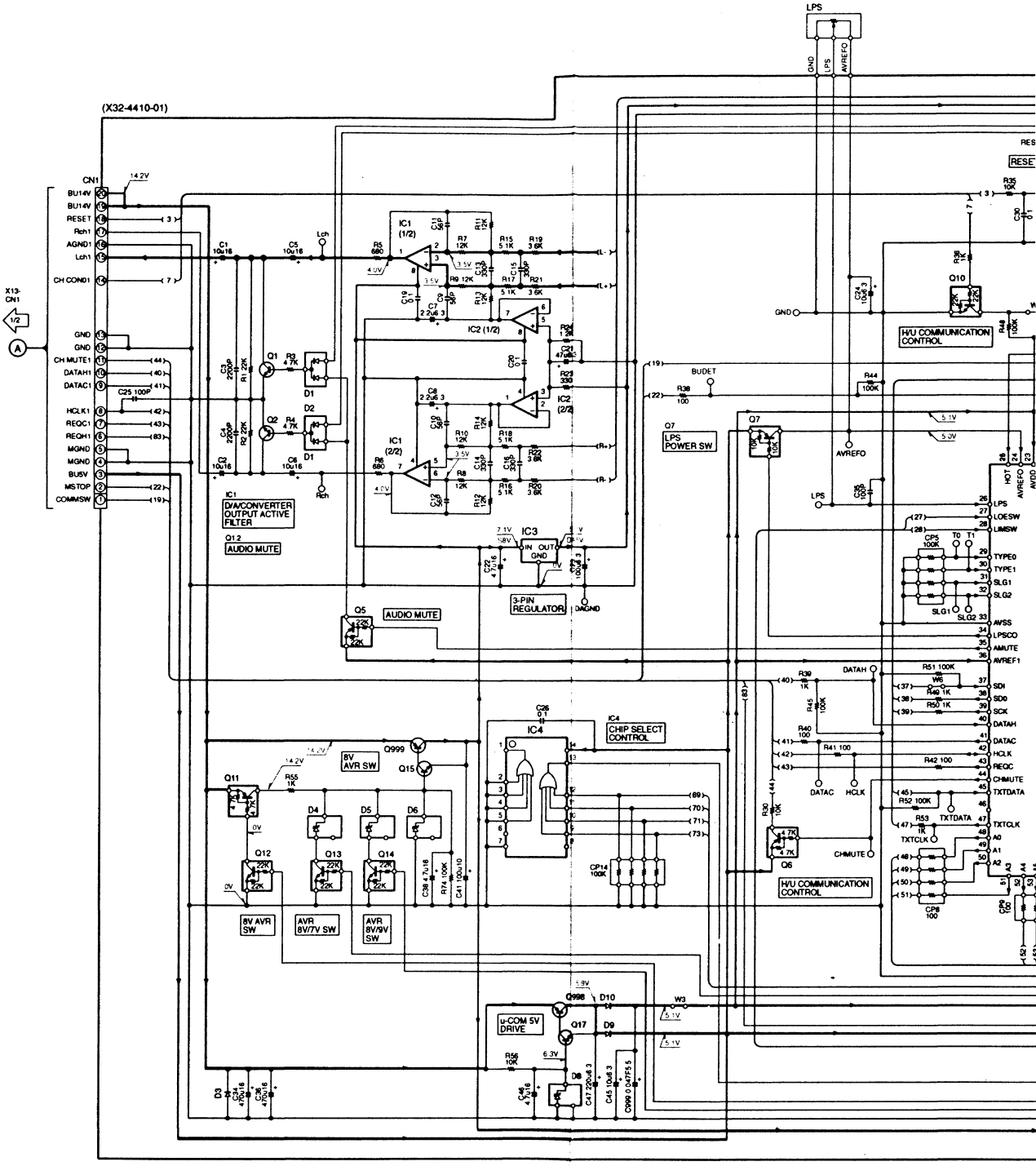
(X32-4410-01)
CN1
BU14V
BU14V
RESET
Rch1
AGND1
Lch1
CH COND1
GND
GND
CH MUTE1
DATAH1
DATAC1
HCLK1
REQC1
REQH1
MGND
MGND
BU5V
MSTOP
COMMSW
X13-CN1
IC1 (1/2)
IC2 (1/2)
IC1 (2/2)
IC2 (2/2)
IC1
D/A/CONVERTER OUTPUT ACTIVE FILTER
Q12
AUDIO MUTE
Q5
AUDIO MUTE
IC3
3-PIN REGULATOR
DAGND
Q7
LPS POWER SW
LPS
AVREFO
BUDET
H/U COMMUNICATION CONTROL
Q10
IC4
CHIP SELECT CONTROL
8V AVR SW
Q999
Q15
Q11
Q12
Q13
Q14
8V AVR SW
AVR 8V/7V SW
AVR 8V/9V SW
u-COM 5V DRIVE
Q998
Q17
D10
D9
D8
W3
DATAH
DATAC
HCLK
CHMUTE
TXTDATA
TXTCLK
H/U COMMUNICATION CONTROL
SDI
SDO
SCK
DATAH
DATAC
HCLK
REQC
CHMUTE
TXTDATA
TXTCLK
A0
A1
A2
A3
A4
LPS
LOESW
LIMSW
TYPE0
TYPE1
SLG1
SLG2
AVSS
LPSCO
AMUTE
AVREF1
AVREFO
AVDD
HOT